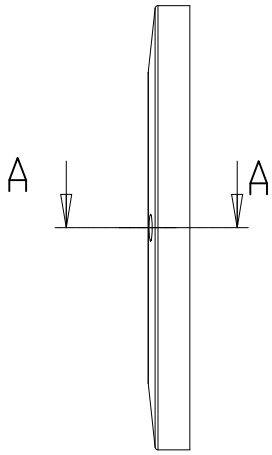

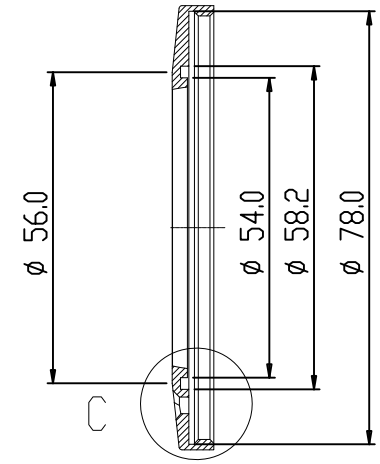

A-A

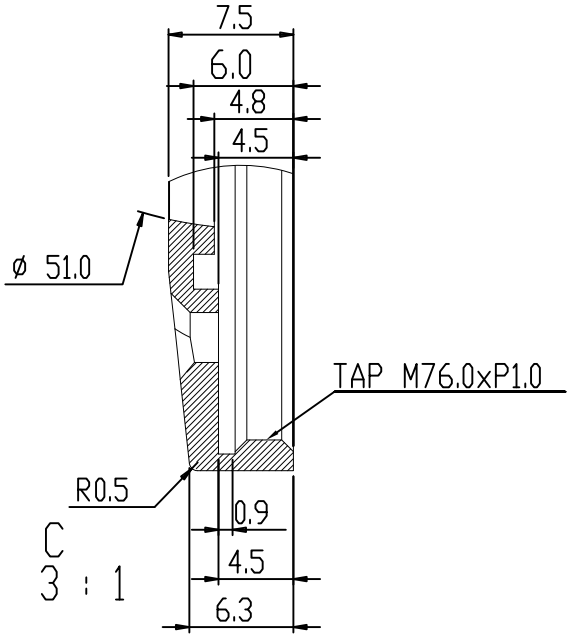

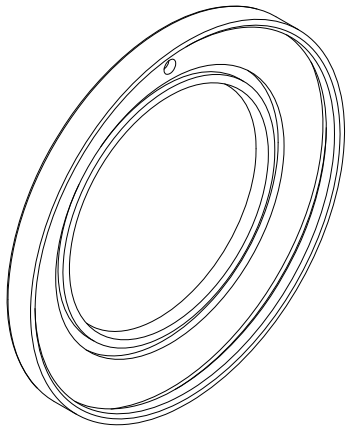

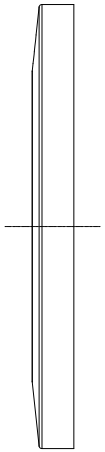

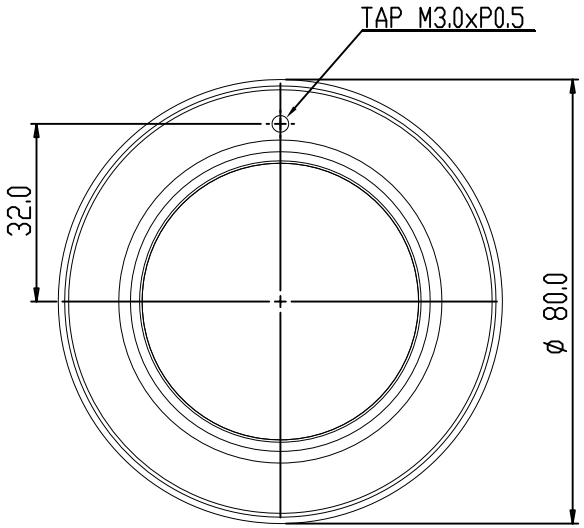

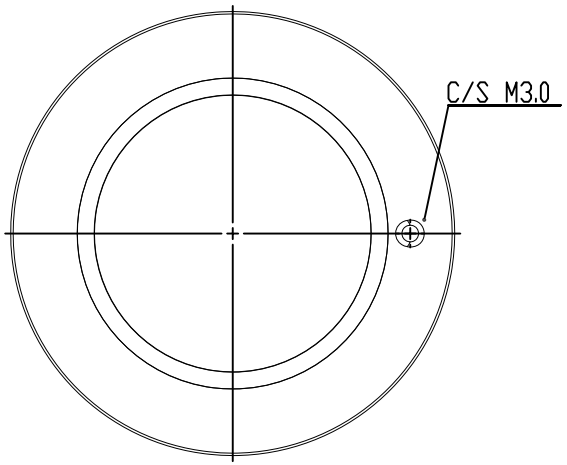

DIGITAL WATCHDOG
Everything's Digital
5436 W.Crenshaw Street Tampa, FL 33634
Toll Free: 866-4463595
Tel: 813-888-9555
Fax 813-888-9262
www.Digital-Watchdog.com

DESCRIPTION MICRO-VD

FRONT COVER