5436 W Crenshaw Street
Tampa, FL 33634
www.digital-watchdog.com
Technical Support: 1-866-446-3595 / 813-888-9555

INSTRUCTION MANUAL

D1365T Series

About this manual

Before installing and using the camera, please read this manual carefully.
Be sure to keep it handy for future reference.

PRECAUTIONS

■ Do not open or modify
Do not open the case except during maintenance and installation, as it may be dangerous and cause damages.

■ Do not put objects inside the unit
Make sure that no metal objects or flammable substances get inside the camera. It could cause fire, short-circuits or damages.

■ Be careful when handling the unit
To prevent damage, do not drop the camera or subject it to strong shock or vibration.

■ Install away from electric or magnetic fields

■ Protect from humidity and dust

■ Protect from high temperature
Be careful when installing close to the ceiling , in a kitchen or boiler room, as the temperature may rise to high levels.

■ Cleaning
Dirt can be removed from the case only by wiping it with a soft cloth moistened with a soft detergent solution.

■ Mounting Surface
The mounting surface material must be strong enough to support the camera.

TROUBLESHOOTING

Before sending the camera out for repair, check the items below.
If the problem persists after checking these items, contact your service center.

■ If no image appears

Is the coaxial cable attached securely?
Are the power and voltage normal?
Has the iris of the lens inside the camera been adjusted correctly (with the level volume) ?
Is there adequate illumination?

■ If the image is unclear

Is the lens in focus?
Is the lens dirty?
Dirt or fingerprints on the lens can adversely affect the images. Gently wipe any dirt or fingerprints off the lens with a soft cloth or lens cleaning paper and cleaning fluid (commercially available).
Is the monitor adjusted correctly?

WARNING:
TO PREVENT THE RISK OF FIRE OR ELECTRIC SHOCK, DO NOT EXPOSE
THIS APPLIANCE TO RAIN OR MOISTURE.

DIMENSION (mm)

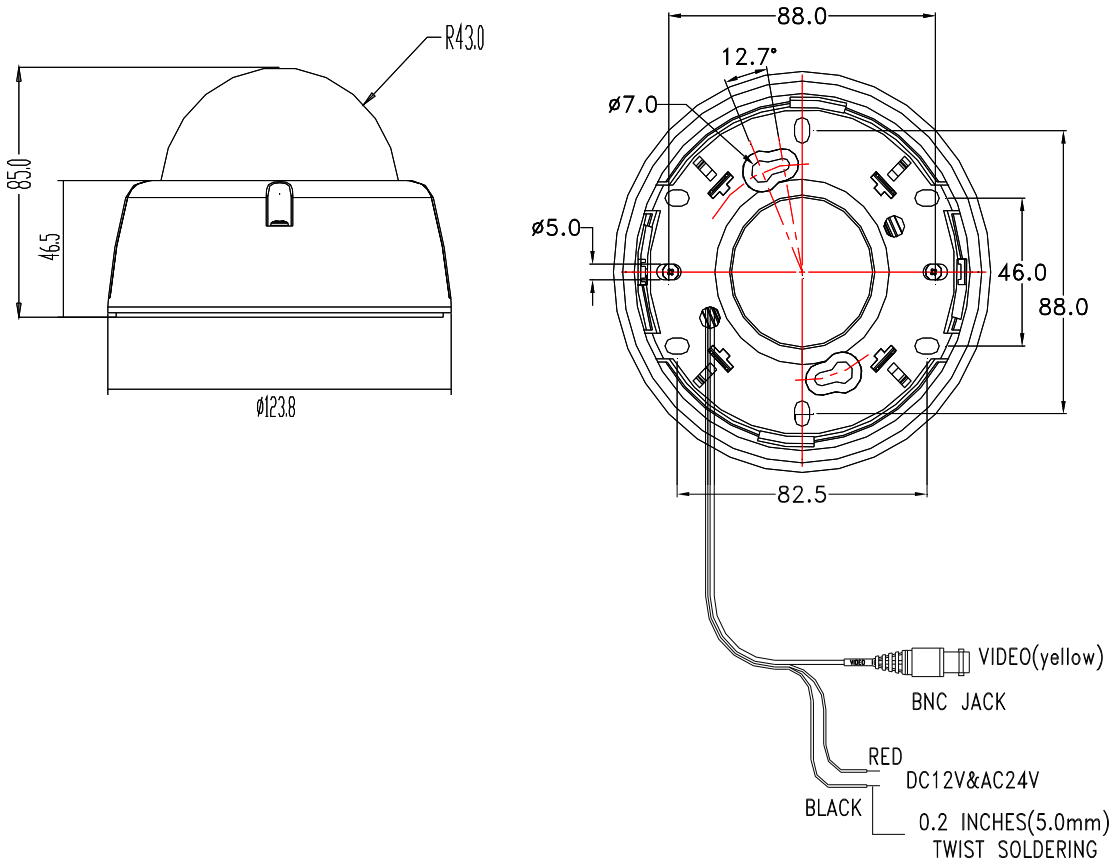

INSTALLATION

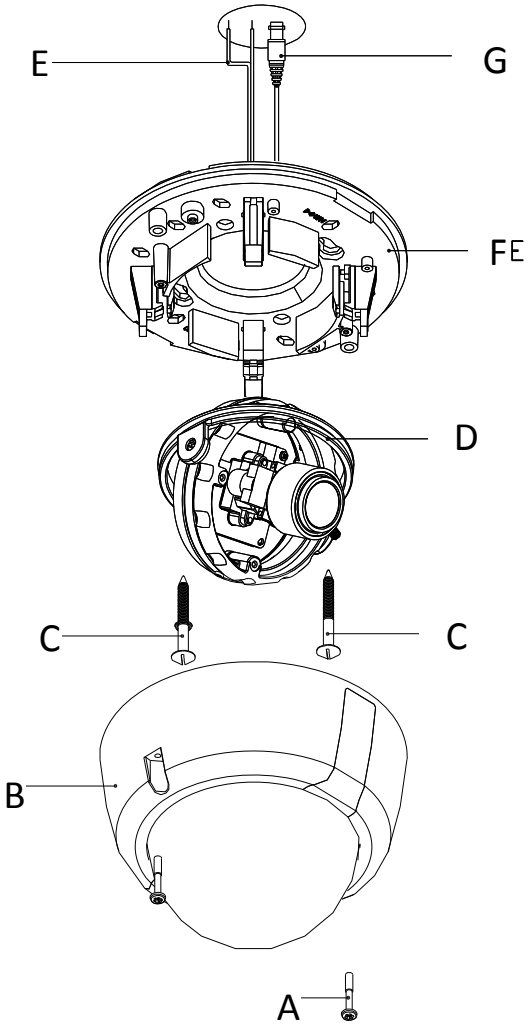

A. Loosen the fixing screw using the L-wrench.

B. Separate the upper case and the base case.

C. Loosen the inner screws using a screwdriver.

D. Detach the gimbal from the base case.

E. Cut a hole in the ceiling for routing the cables.

F. Place the camera horizontally on the ceiling, drill the screw holes at the marked two positions.

G. Pass the power cable and video cable from the camera unit through the cable hole in the ceiling.

H. Align the screw holes of the camera unit with the holes in the ceiling, secure with the two screws.

I. Fix gimbal to the base.

J. Install and adjust the camera unit.

K. Adjust the dome to show the lens through the camera window, attach to the base.

L. Put the upper case and the base together.

M. Tighten the screw for the upper/base cases not to be separated .

CONNECTION

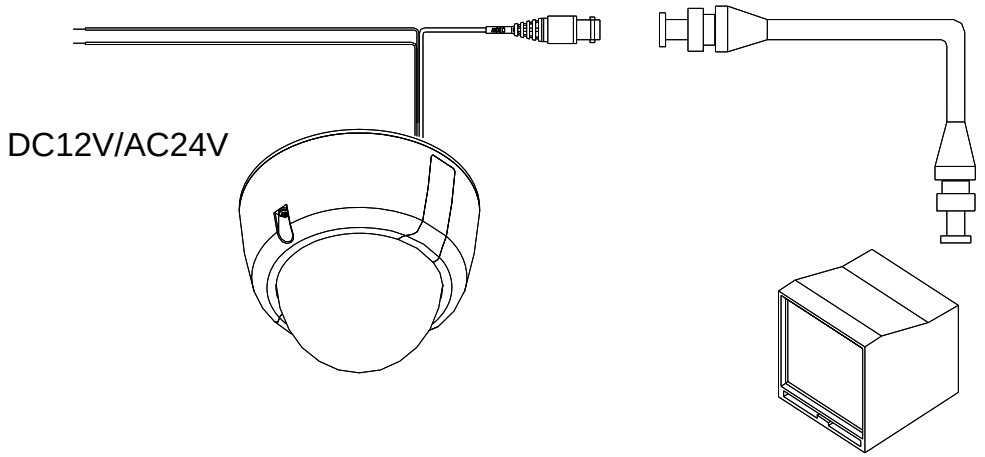

CAUTION :

Check for polarity when using a DC 12V or AC 24V power supply.

LENS ADJUSTMENT & GIMBAL ADJUSTMENT

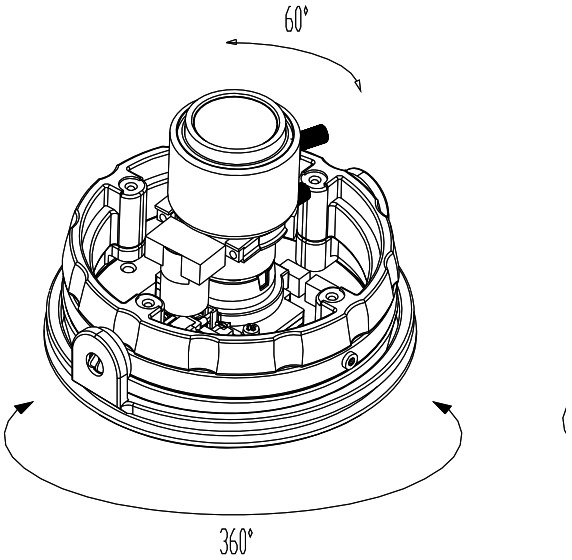

1. Adjust the panning(360˚) and tilt(60˚) position.
2. Setting the zoom position by using Zoom Lever Screw.
3. Setting the focus by using Focus Lever Screw.

CAMERA SETTINGS

D1365T camera

■ CAMERA SETTINGS

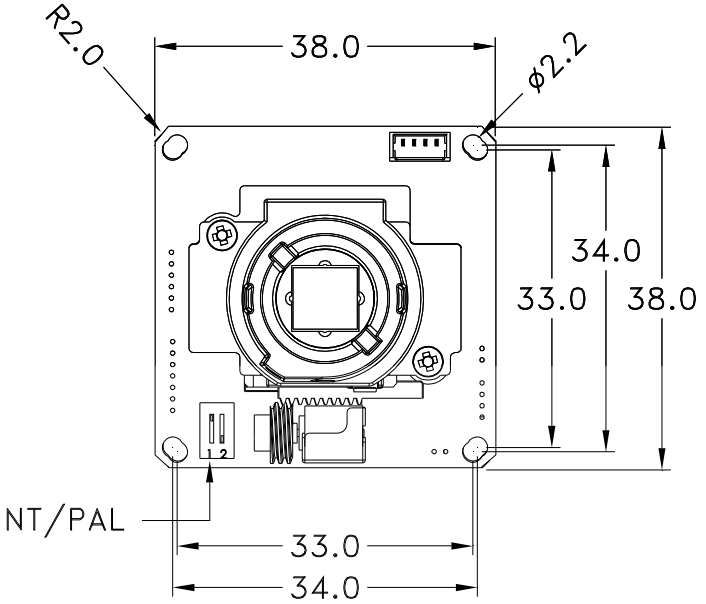

	1	2
ON	NTSC	x
OFF	PAL	x

■ SIDE CONTROL BOARD FOR CAMERA SETTINGS

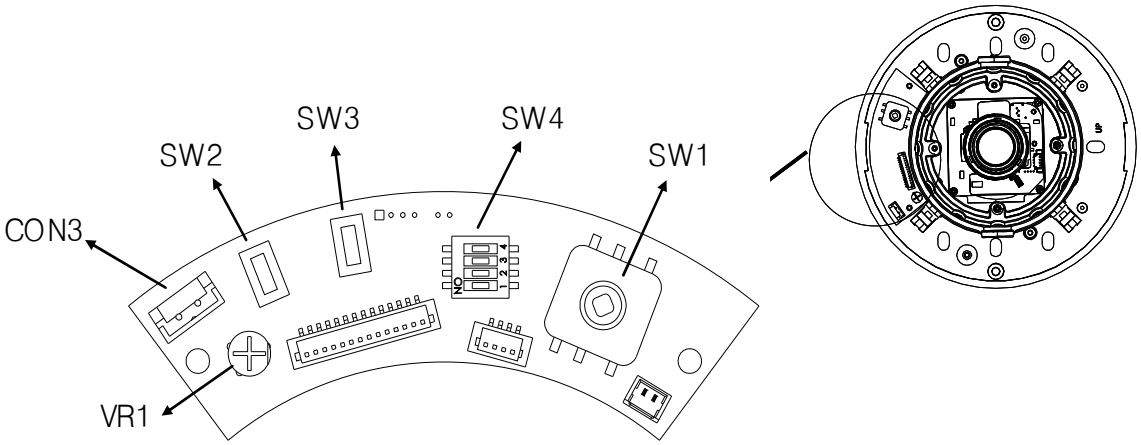

FUNCTIONAL OF CONTROL BOARD

[1]DC IRIS LEVEL control (VR1)[NOT using]
[2]Functional control of O.S.D(On Screen Display)(SW1)
[3]Functional of VIDEO OUT(2ND) (CON3)
[4]Functional when using PAN FOCUS LENS[OPTION]
(1) Press ZOOM IN(SW2) and ZOON OUT(SW3) at the same time to reset the PAN FOCUS LENS.
(2) With the focus correct by pressing ZOOM OUT(SW3), check if the lens angle of view changes up to 2.9mm.
(3) With the focus correct by pressing ZOOM IN(SW2), check if the lens angle of view changes up to 8.5mm.

OSD SWITCH FUNCTIONS

D1365T Color Dome Camera

■ OSD MUNU ENTER/EXIT

A. OSD MENU ENTER

• Pushing Enter Key for 3 seconds.

B. OSD MENU EXIT

• Press EXIT Menu from Main Menu

■ MAIN MENU

A. SETUP ID

• DISPLAY ID
  - ON :The ID name will displayed in the monitor.
  - OFF : The name will not displayed in the monitor.

• CAMERA ID : You can be written to 12 characteristic.

• ID POSITION : Select on screen position of the camera ID.

B. LENS

• MANUAL : Use When using Manual lens.

• DC : You can control the brightness of the screen and adjust the desired DC level from 10 to -40.

C. WDR

•EXPO(EXPOSURE): It has the effect of lightening or darkening the picture

•WDR (Wide Dynamic Range) : You can adjust the desired WDR level from 20 to -20.

D. WB CONTROL

• ATW (Auto Tracking White Balance) : The camera automatically control the white balance in any environment.

• AWB (Auto White Balance) : The white balance is automatically adjusted in a specific environment.

• MANUAL : Users can adjust the colors by adding or reducing the WB level. You can adjust the desired WB level from 2,500K to 9,500K

E. AGC

- ON : Activate automatic gain control feature.
  You can adjust the desired AGC level from 0 to 38dB.
- OFF : Deactivate automatic gain control feature.

F. LOW LIGHT

- SLOW SHUTTER : Control Image brightness by adjusting shutter speed
  - AGC : shutter speed setting(Range 28 to 48)
  - MAX FIELD : Shutter open from Min. x2 to Max. x32 filed accumulation period.
- B&W SS (Black and White Slow Shutter)
- GAIN : To get brighter picture.

G. SYNC

- INTERNAL : Internal synchronization
- LINE LOCK : Phase adjustment may be necessary in multiple camera installations to prevent picture roll when switching between cameras

H.RS485

- CAMERA # : Selectable from 1 to 255 (Note : Pelco D is the default)

I. DAY/NIGHT

- AUTO : For automatic switchover from day mode to night
  (Note : This setting is dependent on the AGC setting.)
- B/W : To keep a B/W image at all times
- COLOR : To keep a color image at all times
- CDS : external input signal control

J. EXIT MENU

- EXIT NO CHANGES : No change
- SAVE NEW AND EXIT : Save change
- RESTORE FACTORY SETTINGS : Factory default
- SW REV

K. PREVIOUS PAGE

- PREVIOUS PAGE : Return page

WARRANTY INFORMATION

Digital Watchdog (referred to as “the Warrantor”) warrants the Camera Series against defects in materials or workmanship as follows:

LABOR: For the initial five (5) years from the date of original purchase, if the camera is determined to be defective, the Warrantor will repair or replace the unit, with
new or refurbished product at its option, at no charge.

PARTS: In addition, the Warrantor will supply replacement parts for the initial five (5) years.

To obtain warranty or out of warranty service, please contact a Technical Support Representative at **1-866-446-3595** Monday through Friday from 9:00 AM to 5:00 PM Eastern.

A purchase receipt or other proof of the date of the original purchase is required before warranty service is rendered. This warranty only covers failures due to defects in materials and workmanship which arise during normal use. This warranty does not cover damage which occurs in shipment or failures which are caused by products not supplied by the Warrantor or failures which result from accident, misuse, abuse, neglect, mishandling, misapplication, alteration, modification, faulty installation, set-up adjustments, improper antenna, inadequate signal pickup, maladjustment of consumer controls, improper operation, power line surge, improper voltage supply, lightning damage, rental use of the product or service by anyone other than an authorized repair facility or damage that is attributable to acts of God.

LIMITS AND EXCLUSIONS

There are no express warranties except as listed above. The Warrantor will not be liable for incidental or consequential damages (including, without limitation, damage to recording media) resulting from the use of these products, or arising out of any breach of the warranty. All express and implied warranties, including the warranties of merchantability and fitness for particular purpose, are limited to the applicable warranty period set forth above.

Some states do not allow the exclusion or limitation of incidental or consequential
damages, or limitations on how long an implied warranty lasts, so the above exclusions or limitations may not apply to you. This warranty gives you specific legal rights and you may also have other rights that vary from state to state.

If the problem is not handled to your satisfaction, then write to the Address above.

Service calls which do not involve defective materials or workmanship as determined by the Warrantor, in its sole discretion, are not covered. Costs of such service calls are the responsibility of the purchaser.

Model	**D1365T**	
Camera TYPE	Color/BW	Plastic, Day/Night PIXIM Dome Camera
	Mount	Surface
Image	Device	1/3" PIXIM
	Pixels-Total	742(H) x 552(V)
	Pixels-Effective	720(H) x 540(V)
Scanning	System	525 line, 2:1Interlace
	Horizontal Frequency Internal Mode	15,734 Hz
	Vertical Frequency Internal Mode	59.94 Hz
Min. Scene Illumination	F1.2	0.08 Lux [TDN 0.01 Lux]
WDR	WDR LEVEL	-20 to 20
OSD controls	SLOW-SH	2X ~ 32X
	AGC	ON/OFF (Gain Adjust)
	AWB	ATW / AWB / Manual
Lens	Focal Length	3.3 ~ 12mm
Resolution	Horizontal	540 TV Lines [at TDN (B/W) :570 TV Lines]
Video Output	VBS 1.0Vp-p	VBS 1.0Vp-p(75 Load)
S/N Ratio	S/N Ratio	48dB
Environmental Conditions	Operating Temperature	-10℃ ~ +55℃(14°F ~ 131°F)
	Humidity	Less than 90%
Power	Power Requirement	12VDC/24VAC
	Power Consumption	12VDC: 190mA 24VAC: 170mA
Physical Specification	Dimensions(W x H)	123.8 x 85mm
	Weight	0.7 lbs
Certifications	CE, FCC, RoHS	Certified